Applications of Lanthanoid Shift Reagents to ^{13}C and ^{1}H Nuclear Magnetic Resonance Spectroscopy [1]

By B. F. G. Johnson, J. Lewis,* P. McArdle, and J. R. Norton, University Chemical Laboratory, Lensfield Road, Cambridge

The induction by conventional shift reagents of contact effects in donor substrates containing delocalised π systems has been confirmed by ^{13}C, ^{19}F, and ^{1}H data. For a given lanthanoid, the magnitude of these effects is dependent on the particular chelate employed. It therefore follows that, when no change in shift ratios is observed as the europium chelate is varied, significant contact effects are not present. The axial symmetry approximation, although clearly not always valid, has given excellent predictions of both ^{1}H and ^{13}C shifts observed with (tropone)$Fe(CO)_3$. Correction by diamagnetic lanthanoid complexation shifts significantly improves agreement of observed and calculated ^{13}C shifts. Attempts to use shift reagents empirically on a series of closely related organometallic molecules have given mixed results, suggesting that the average magnetic axis orientation may be sensitive to small changes in substrate geometry.

DESPITE the large amount of published work [2-6] describing the effects of lanthanoid(III) complexes on the n.m.r. spectra of donor substrates, there is still no detailed understanding of the interactions occurring in solution in a typical shift reagent experiment. In general, a ligand co-ordinated to a paramagnetic ion can experience (i) spin delocalisation (contact) effects, proportional to unpaired spin density at the nuclei examined; (ii) metal-centred dipolar (pseudocontact) effects, described by equation (1) in terms of the principal axes of the sus-

$$\frac{\Delta H}{H_0} = \frac{1}{2r^3}[(3\cos^2\theta - 1)(\bar{\chi} - \chi_{zz}) + \sin^2\theta\cos 2\phi(\chi_{yy} - \chi_{xx})] \quad (1)$$

ceptibility tensor and the polar co-ordinates of the examined nuclei with respect to those axes;[7] and (iii) ligand-centred pseudocontact effects.[7]

The second effect (metal-centred pseudocontact) has been extensively analysed in terms of temperature dependence and relation to electronic structure of the lanthanoid.[8] A number of workers [9-11] have proposed its use to analyse the configuration of substrate molecules in solution. Such techniques involve several assumptions. (1) Contact effects must be negligible for all nuclei included in the calculations. (2) The time-averaged lanthanoid substrate system must be describable by a single set of axially-symmetric magnetic axes, so that relative shifts depend only upon the polar angle θ and distance r. This allows the use of only the first term in the pseudocontact shift equation (1) above. More complex magnetic axes and multiple binding sites are possible in principle, but increase the proportion of data which must be devoted to positioning the magnetic axes and hence decrease the accuracy with which a structure can be determined. (3) The shift data used must represent true dipolar shifts, which may be defined as the difference between the chemical shifts actually observed and those displayed by a hypothetical system which is identical in every respect other than the presence of magnetic anisotropy in the lanthanoid atom. (4) The dipolar expression for the pseudocontact shift must be valid and there must be no ligand-centred pseudocontact effects. This last requirement is automatically satisfied if contact effects are absent.

In this paper conventional shift reagents are shown to produce large contact effects on the chemical shifts of ^{1}H, ^{19}F, and ^{13}C in some types of compounds. A method for detecting the absence of such effects is proposed. Computer placing of the magnetic axes best to fit the proton shift data for a typical organometallic compound, tricarbonyl(tropone)iron, is described. It is shown that the ^{13}C shift data agree well with the shifts predicted by this model after the diamagnetic correction or co-ordination shift has been taken into account. The use of shift data in an empirical manner is also discussed.

EXPERIMENTAL

^{1}H N.m.r. spectra were taken on a Varian HA 100 spectrometer with tetramethylsilane as lock. ^{19}F Spectra were taken on a Varian XL 100 spectrometer with [$^{2}H_6$]benzene as solvent and its ^{2}D resonance as lock. ^{13}C Spectra were taken on a Varian XL 100 FT with solvent (C_6D_6 or $CDCl_3$) deuterium lock. Both machines were operated at ambient temperature (*ca.* 30 °C). Compounds (IIa) and (IIb) were prepared as previously reported.[12b] The alcohols (IIc—e) were prepared from the appropriate salts [12a] by a modification of the previous procedure.[12b] The general method was as follows. An acetone solution (30 ml) of the salt (2 g) was treated with a large excess of solid sodium bicarbonate (2 g). Water was added, with constant stirring, until the bicarbonate began to dissolve. Extraction with ether

[1] Preliminary communication of part of this work: B. F. G. Johnson, J. Lewis, P. McArdle, and J. R. Norton, *J.C.S. Chem. Comm.*, 1972, 535.

[2] C. C. Hinckley, *J. Amer. Chem. Soc.*, 1969, **91**, 5160.

[3] W. D. Horrocks, jun., and J. P. Sipe, tert, *J. Amer. Chem. Soc.*, 1971, **93**, 6800, and references therein.

[4] J. K. M. Sanders, S. W. Hanson, and D. H. Williams, *J. Amer. Chem. Soc.*, 1972, **94**, 5325, and references therein.

[5] J.-P. Begue, *Bull. Soc. chim. France*, 1972, 2073.

[6] B. Bleaney, C. M. Dobson, B. A. Levine, R. B. Martin, R. J. P. Williams, and A. V. Xavier, *J.C.S. Chem. Comm.*, 1972, 791, and references therein.

[7] R. J. Kurland and B. R. McGarvey, *J. Magnetic Resonance*, 1970, **2**, 286.

[8] B. Bleaney, *J. Magnetic Resonance*, 1972, **8**, 91.

[9] C. D. Barry, A. C. North, G. A. Glasel, R. J. P. Williams, and A. V. Xavier, *Nature*, 1971, **232**, 236.

[10] M. Ochiai, E. Mizuta, O. Aki, A. Morimoto, and T. Okada, *Tetrahedron Letters*, 1972, 3245.

[11] M. R. Wilcott, R. E. Lenkinski, and R. E. Davis, *J. Amer. Chem. Soc.*, 1972, **94**, 1742; R. E. Davis and M. R. Wilcott, *ibid.*, p. 1744.

[12] (*a*) B. F. G. Johnson, J. Lewis, P. McArdle, and G. L. P. Randall, *J.C.S. Dalton*, 1972, 2076; (*b*) G. L. P. Randall, Ph.D. Thesis, London University, 1970.

(100 ml), washing with water (2 × 100 ml), drying ($MgSO_4$), evaporation *in vacuo*, chromatography on alumina (activity V) with ether, and evaporation of the yellow band which developed, gave the alcohol in 80—90% yield. (IIc) Found: C, 53·5; H, 4·9. $C_{13}H_{14}FeO_4$ requires C, 53·8; H, 4·8. (IId) Found: C, 61·2; H, 4·5. $C_{18}H_{16}FeO_4$ requires C, 61·4; H, 4·5. (IIe) Found: C, 62·2; H, 5·0. $C_{19}H_{19}FeO_4$ requires C, 62·3; H, 4·9%. Other substrates were generally available in this laboratory or were purchased commercially.

Lanthanoid chelates were either purchased from Ryvan Chemical Co. or prepared by standard methods.[13] $La(dpm)_3$ was generously donated by Dr. J. K. M. Sanders and sublimed *in vacuo* before use. $Eu(pta)_3$ [tris(pivaloyltrifluoroacetonato)europium(III)] was synthesised by the method of Shigematsu *et al.*[14] and converted to the anhydrous form by exposure to high vacuum for several days before use.

Increasing amounts of solid shift reagents were added to solutions containing fixed amounts of substrate. In the ^1H work this process was generally carried out until the largest shift was 400—1000 Hz. The reported relative shifts were invariant to the shift reagent : substrate ratio.

RESULTS AND DISCUSSION

Contact Effects.—These are presumed to be rare with lanthanoids although they are well documented for the aquo ions.[4,15,16] There is no reason to expect that they should be totally absent with conventional shift reagents. It is worth noting that direct delocalisation from lanthanoid 4*f* orbitals into ligand orbitals is not required; indeed, in some actinoid systems, where contact effects are quite common, such direct delocalisation is the only mechanism that can be ruled out.[17]

γ-Picoline *N*-oxide and related compounds are well established substrates in contact shift studies.[3,18] Their high symmetry ensures detection of most conceivable variations in average co-ordination geometry. Table 1 shows relative shifts for these compounds in the presence of various lanthanoid chelates, listed in order of the increasing deviation they produce from the shift ratios predicted by pseudocontact geometric factors. Substantial contact contributions may be identified by: (1) variation of shift patterns with changes in lanthanoid chelate, when the geometry affecting pseudocontact shifts must be essentially unchanged (by symmetry the average lanthanoid position is confined to a line defined by the intersection of the plane of the ring and its perpendicular plane of symmetry); (2) alternation of the sign of the deviation from pseudocontact shift ratios between adjacent protons around the system ring;[19,20] (3) change of sign of that deviation upon changing H to CH_3 at the *para* position.[19,20] In the cases where the contact effects for γ-picoline *N*-oxide are largest the total shift pattern resembles that of the contact shifts reported for the same ligand co-ordinated to nickel(II): the β-H and CH_3 signals are displaced in the opposite direction from the α-H signal, and the CH_3 signal experiences the largest shift.[18]

TABLE 1

Relative [a] lanthanoid-induced chemical shifts for pyridine *N*-oxide and aniline derivatives

γ-Picoline *N*-oxide [b]	α	β	Me
$Pr(fod)_3$	−10	−3·4	−2·0
$Pr(dpm)_3$	−10	−3·0	−1·8
$Yb(dpm)_3$	10	2·6	1·3
$Yb(fod)_3$	10	2·5	1·3
$Er(dpm)_3$	10	2·6	1·4
$Eu(dpm)_3$	10	2·2	1·0
$Er(fod)_3$	10	1·2	0·14
$Eu(fod)_3$	10	−2·0	−5·0
$Eu(pta)_3$	10	−11·1	−11·7
Calc.[c] for pseudocontact	10	3·4	1·5
[d]	+	−	−
Pyridine *N*-oxide [b]	**α**	**β**	**γ**
$Pr(fod)_3$	−10	−3·1	−3·1
$Eu(dpm)_3$	10	2·5	2·5
$Yb(fod)_3$	10	2·2	2·2
$Eu(fod)_3$	10	−1·4	5·8
Calc.[c] for pseudocontact	10	3·4	2·5
[d]	+	−	+
***p*-Toluidine [b]**	***o***	***m***	***p***
$Yb(fod)_3$	10	2·5	1·1
$Eu(dpm)_3$	10	2·35	0·8
$Eu(fod)_3$	10	2·2	0·45
[d]	+	−	−
Aniline [e]	***o***	***m***	***p***
$Yb(fod)_3$	10	2·8	2·3
$Pr(fod)_3$	−10	−3·1	−2·7
$Eu(dpm)_3$	10	2·5	2·7
$Eu(dpm)_3$ [b,f]	10	2·1	2·5
$Eu(fod)_3$	10	2·5	3·5
[d]	+	−	+
$C_6F_5NH_2$ [g]	***o***	***m***	***p***
$Eu(fod)_3$	10	1·4	2·5
$Eu(pta)_3$	10	1·7	4·0
[d]	+	−	+

[a] Relative to α or *o* ^1H or ^{19}F as 10; positive shifts downfield. [b] Solvent $CDCl_3$. [c] Calculated with Ln–O distance of 2·4 Å and with averaging between equivalent two positions with N–O–Ln angle of 120°. [d] Sign pattern of change with increasing contact contribution: a + sign means that the contact contribution parallels the pseudocontact one, a − sign that it opposes it. [e] Solvent CS_2. [f] Data of Armitage *et al.*, *J. Amer. Chem. Soc.*, 1973, **95**, 1437. [g] Solvent C_6D_6.

Such contact contributions are especially apparent in ^{13}C n.m.r.[21,22] In pyridine–lanthanoid shift reagent experiments, for example, spin delocalisation is clearly revealed by recent ^{13}C data,[23] but was not obvious from

[13] K. J. Eisentraut and R. E. Sievers, *Inorg. Synth.*, 1968, **11**, 94.
[14] T. Shigematsu, M. Matsui, and K. Utsonomiya, *Bull. Chem. Soc. Japan*, 1969, **42**, 1278.
[15] W. B. Lewis, J. A. Jackson, J. F. Lemons, and H. Taube, *J. Chem. Phys.*, 1962, **36**, 694.
[16] J. Reuben and D. Fiat, *J. Chem. Phys.*, 1969, **51**, 4909.
[17] A. Streitweiser, jun., D. Dempf, G. N. LaMar, D. G. Karraker, and N. Edelstein, *J. Amer. Chem. Soc.*, 1971, **93**, 7343.
[18] R. W. Kluiber and W. D. Horrocks, jun., *J. Amer. Chem. Soc.*, 1965, **87**, 5350; W. D. Perry, R. S. Drago, D. W. Herlocker, G. K. Pagenkopf, and K. Czworniak, *Inorg. Chem.*, 1971, **10**, 1087.
[19] G. A. Webb, *Annual Reports N.M.R. Spectroscopy*, 1970, **3**, 211.
[20] D. R. Eaton and K. Zaw, *Co-ordination Chem. Rev.*, 1971, **7**, 197.
[21] D. Doddrell and J. D. Roberts, *J. Amer. Chem. Soc.*, 1970, **92**, 6839.
[22] A. A. Chalmers and K. G. R. Pachler, *Tetrahedron Letters*, 1972, 4033.
[23] M. Hirayama, E. Edagawa, and Y. Hanyu, *J.C.S. Chem. Comm.*, 1972, 1343.

previous ^{1}H data alone. As expected the ^{13}C shifts for γ-picoline *N*-oxide (Table 2) provide additional con-

TABLE 2

^{13}C N.m.r. data for γ-picoline *N*-oxide

Carbon nucleus	Chemical shift [a] without lanthanoid	Shift [b] induced by Eu(fod)$_3$	Er(fod)$_3$	Eu(dpm)$_3$
α	138·0	−5	42	90
β	126·2	35	17	42
γ	136·8	*c*	0	50
CH_3	19·9	18	5	18

[a] P.p.m. downfield of tetramethylsilane in $CDCl_3$. [b] In Hz. [c] Too broad for accurate measurement.

firmation of the existence of contact effects. The use of Eu(fod)$_3$ and Er(fod)$_3$ provides an internal check for the effects of the diamagnetic correction (see below). If one assumed pseudocontact shifts these data are inconsistent with each other and with calculated geometric ratios; hence they must reflect contact effects.

Similar but less obvious effects are seen with aniline and *p*-toluidine. After this work was completed Armitage and co-workers [24] reported experimental shift reagent data for aniline and Eu(dpm)$_3$ in good agreement with ours (Table 1), and pointed out the impossibility of reconciling these data with any static model for the lanthanoid–substrate complex. They then considered various internal rotation models, including a 'free rotation' model such as the one discussed below (and rejected) with (tropone)Fe(CO)$_3$ as substrate. While acceptable fits to the two independent experimental parameters were achieved, a small contact contribution provides a much more reasonable explanation of the observed results. Our additional data showing variations in the aniline pattern with different lanthanoids, and the contrast between the aniline and *p*-toluidine results (Table 1), cannot reasonably be explained by a variation in modes of internal rotation. The ^{19}F shifts of $C_6F_5NH_2$ continue this pattern by showing large contact contributions, especially with Eu(pta)$_3$.

It is clear that the contact contribution increases along the series Pr(fod)$_3$ < Pr(dpm)$_3$ < Yb(dpm)$_3$ < Yb(fod)$_3$ < Er(dpm)$_3$ < Eu(dpm)$_3$ < Er(fod)$_3$ < Eu(fod)$_3$ < Eu(pta)$_3$. The order among the lanthanoids is not precisely that seen in pure contact shifts [15,16] since one is watching relative contact and pseudocontact effects.

We suggest that since changes in chelate produce drastic changes in the amount of contact shift, the absence of such changes in observed shift ratios can be used as reasonable evidence for the absence of a contact shift. The presence of such changes cannot itself be used as evidence for contact effects, since these changes could result from binding geometry changes.

The systems here, with these particular shift reagents, probably represent isolated but unpredictable exceptions to the general rule [3] that lanthanoid shift reagents produce largely pseudocontact effects. Quite a number of recent anomalies in shift reagent work are likely to involve contact effects, not only close to the binding sites [25–28] but in other extended π-systems such as quinoline,[22] pyridine,[23] and γ-picoline.[29]

Validity of Axial Symmetry Approximation and Effect of Diamagnetic Correction.—An axially symmetric geometry has always seemed quite improbable for a 2 : 1 substrate–shift reagent complex, and this has been borne out by the recent *X*-ray structure determination of crystalline Eu(dpm)$_3$(py)$_2$.[30] Furthermore, it is now clear that such 2 : 1 adducts are frequently formed in significant amounts in solution. Such stoicheiometry was established by n.m.r. at −80° for the Eu(fod)$_3$,-2DMSO complex.[31] Very recently an extensive analysis by traditional n.m.r. methods for determining complex stoicheiometry in shift reagent experiments has shown both 2 : 1 and 1 : 1 complex formation,[32] and it has been elegantly demonstrated by circular dichroism techniques [33] that the major species in Eu(fod)$_3$–alcohol mixtures is eight-co-ordinate. In fact this result was implicit in the earlier work of Whitesides and Lewis,[34] who noted that mixtures of Eu(dpm)$_3$ and a chiral amine produced different shifts in different enantiomers of a racemic Lewis base.

It is, however, perfectly possible for rotation around the lanthanoid–substrate bond to produce *effective* axial symmetry regardless of the stoicheiometry of the complex. An anisotropic susceptibility (χ_1, χ_2, and χ_3 along its principal axes) must, when rotated about *any* axis, be describable from a fixed frame of reference in terms of only two susceptibilities, those parallel ($\chi_{\parallel}$) and perpendicular ($\chi_{\perp}$) to that axis. This point has recently been made in greater detail by Randall.[35] In the case of lanthanoid shift reagents this 'rotation' may consist of a rapid dissociation and reassociation of lanthanoid. Recent analyses [36] of proton relaxation times have revealed a lifetime of *ca.* 2×10^{-7} s for quinoline in the co-ordination sphere of Eu(dpm)$_3$, which is very short compared to the n.m.r. time scale (however, the previously mentioned observation [31] of co-ordinated DMSO with Eu(fod)$_3$ at −80° shows that this lifetime can become several orders of magnitude longer; free

[24] I. M. Armitage, L. D. Hall, A. G. Marshall, and L. G. Werbelow, *J. Amer. Chem. Soc.*, 1973, **95**, 1437.
[25] P. V. Demarco, T. K. Elzey, R. B. Lewis, and E. Wenkert, *J. Amer. Chem. Soc.*, 1970, **92**, 5734.
[26] J. Briggs, F. A. Hart, G. P. Moss, and E. W. Randall, *Chem. Comm.*, 1971, 364.
[27] L. W. Morgan and M. C. Bourlas, *Tetrahedron Letters*, 1972, 2631.
[28] H. Donato, jun., and R. B. Martin, *J. Amer. Chem. Soc.*, 1972, **94**, 4129.
[29] R. E. Mackie and T. M. Shepherd, *Organic Magnetic Resonance*, 1972, **4**, 557.
[30] R. E. Cramer and K. Seff, *Acta Cryst.*, 1972, **B28**, 3281.
[31] D. F. Evans and M. Wyatt, *J.C.S. Chem. Comm.*, 1972, 312.
[32] B. L. Shapiro and M. D. Johnston, jun., *J. Amer. Chem. Soc.*, 1972, **94**, 8185.
[33] N. H. Andersen, B. J. Bottino, and S. E. Smith, *J.C.S. Chem. Comm.*, 1972, 1193.
[34] G. M. Whitesides and D. W. Lewis, *J. Amer. Chem. Soc.*, 1971, **93**, 5914.
[35] J. M. Briggs, G. P. Moss, E. W. Randall, and K. D. Sales, *J.C.S. Chem. Comm.*, 1972, 1180.
[36] J. Reuben and J. S. Leigh, jun., *J. Amer. Chem. Soc.*, 1972, **94**, 2789.

rotation about the actual lanthanoid–substrate bond would then become necessary). As long as there is no correlation between the angular orientations of the magnetic axes and of the substrate molecule about the lanthanoid–substrate bond, effective axial symmetry will be achieved.

Such correlation must occur with one well known class of shift reagents, those involving lanthanoid tris-chelates with chiral camphor derivatives [34,37] such as tris(t-butylhydroxymethylene-D-camphorato)europium-(III). The differential interaction of these reagents with *R* and *S* isomers of enantiomeric substrates shows that the chirality is transmitted from the chelate ligand to the substrate and hence that the substrate does not experience an axially symmetric magnetic environment.

To test the feasibility of axial symmetry assumptions for organometallics with conventional shift reagents, and to investigate magnetic axis locations, we chose as a substrate (tropone)$Fe(CO)_3$ (I),[38] an organometallic molecule of suitable complexity whose solid-state

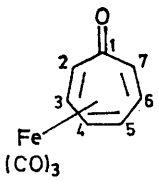

(I)

structure was known by *X*-ray methods.[39] The computer used the crystallographic co-ordinates and, assuming axial symmetry about the magnetic axis, varied (see Figure) the distance *d*, the co-ordination angle α, and the twist angle β. It also tried a random

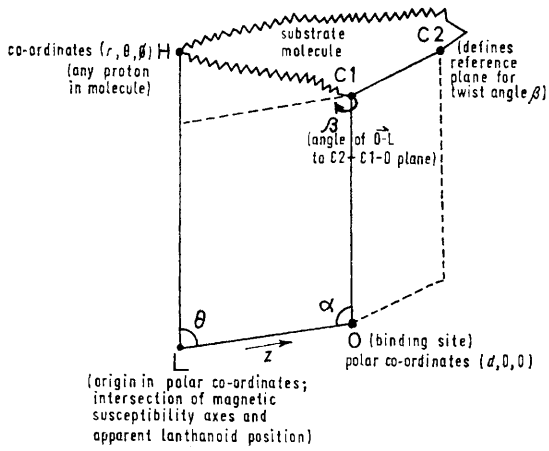

orientation model where all values of the twist angle β of the lanthanoid about the keto group were assumed equally probable; the function $\left\langle \frac{3\cos^2\theta - 1}{r^3} \right\rangle_{\beta = 0 \text{ to } 2\pi}$ was then expressed as a sum of complete elliptic integrals. This model did not match the experimental results with any particular success. Even for alcohols steric interactions, which greatly affect apparent lanthanoid positions,[40] seem likely to produce significant conformational preference about the C–O bond.

Using the more conventional model (fixed magnetic axis centre with respect to the substrate molecule) an apparent lanthanoid position which matched calculated proton shifts with observed ones was obtained. Calculated geometric factors $\left(\frac{3\cos^2\theta - 1}{r^3}\right)$ were scaled to observed ^1H n.m.r. data by the least-squares scale factor suggested by Willcott.[11] This procedure minimises

$$R = \left[\frac{\sum_i (\delta_{obs}^i - \delta_{calc}^i)^2}{\sum_i (\delta_{obs}^i)^2}\right]^{1/2}$$

and implicitly weights all observed shifts as having equal absolute uncertainties, the most realistic assumption.

Preliminary tests (see Table 3) showed the absence of significant contact effects by the criterion developed above: the relative shifts with $Eu(fod)_3$ were almost the same as the relative shifts with $Eu(dpm)_3$. Refinement on the basis of the ^1H n.m.r. data yielded an *R* factor of 1·7% with the Eu placed at a distance of 3·30 Å from the tropone oxygen and at an angle α of 130°; the effective europium position is also twisted 60° below a plane defined by O, C^1, and C^2 and hence away from the tricarbonyliron fragment.

The calculated Eu–O distance is surprisingly long. Although early workers using similar methods on simple organic substrates frequently obtained distances greater than 3 Å,[10,11,40,41] recent careful work [42] on borneol and isoborneol, for example, yielded lanthanoid–oxygen distances of 2·7 Å and below. It seems clear that the effective lanthanoid position can vary considerably [40] and unpredictably so that effects due to changes in solution conformation may to some extent mask themselves as changes in calculated effective europium position.

It is obviously desirable to increase the number of nuclear shifts involved by checking those of ^{13}C under the same conditions. As is shown in Table 3 the ^{13}C shifts agree quite well with those calculated from the magnetic axis position refined on the basis of proton data. However, this is only true after the substantial diamagnetic correction [shift on complexation with $La(dpm)_3$] has been taken into account. Although the correction is negligible for ^1H spectra it seems clear that future calculations involving ^{13}C shifts must take this factor into account. When this is done, however, all

[37] M. Kainosho, K. Ajisaka, W. H. Pirkle, and S. D. Beare, *J. Amer. Chem. Soc.*, 1972, **94**, 5924, and references therein.

[38] Preliminary ^1H shift reagent data for this complex were reported by M. I. Foreman and D. G. Leppard, *J. Organometallic Chem.*, 1971, **31**, C31.

[39] R. P. Dodge, *J. Amer. Chem. Soc.*, 1964, **86**, 5429.

[40] P. V. Demarco, B. J. Cerimele, R. W. Crane, and A. L. Thakkar, *Tetrahedron Letters*, 1972, 3539.

[41] S. Farid, A. Ateya, and M. Maggio, *Chem. Comm.*, 1971, 1285.

[42] G. E. Hawkes, D. Leibfritz, D. W. Roberts, and J. D. Roberts, *J. Amer. Chem. Soc.*, 1973, **95**, 1659.

shift data on the organometallic π-system tricarbonyl-(tropone)iron are readily interpreted as a pure pseudo-contact shift arising from an environment of effectively axial magnetic symmetry.

Empirical Use of Shift Reagents.—Rigorous use of these techniques then involves a number of assumptions which despite occasional exceptions are largely valid. As a test for empirical uses of shift reagents in organometallic chemistry we have investigated the problem of isomerism in alcohols of type (II).

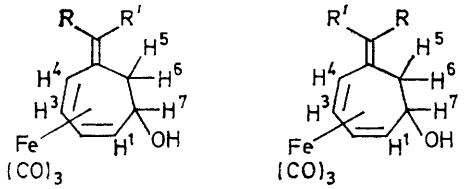

(II)

(a) R = R′ = H
(b) R = H, R′ = Me
(c) R = R′ = Me
(d) R = H, R′ = *p*-tolyl
(e) R = Me, R′ = *p*-tolyl

In certain cases [(IIb) and (IIe)] an apparently non-stereospecific synthesis led to pure samples of single isomers.[12] To determine the stereochemistry about the exocyclic double bond in (IIb) and (IIe) europium shift data for a series of complexes were collected (Table 4). If the average magnetic axis position and complex conformation were unaffected by the nature of the substituent, and if the *trans* H or CH_3 experienced the larger effect, then the assigned shifts for the parent compound (IIa) and the dimethyl derivative (IIc) would characterise H and CH_3 in *cis* and *trans* positions for the entire series of compounds. The first assumption appears to be correct for (IIb—e), as their shift pattern for H^1—H^7 is invariant. However, the unsubstituted (IIa) exhibits distinctly lower values for H^1 and H^5 and also shows an unexpectedly high value for the R′ : R shift ratio (1·25 compared to 1·1). These differences suggest that either the average magnetic axis position or the conformation of the molecule is not the same for the substituted and parent compounds.

If one nevertheless attempts to assign the stereochemistry of (IIb) and (IIe) on the basis of the (IIa) and (IIc) data, one concludes that the methyl group of (IIb) is *cis* and the methyl group of (IIe) is *trans* (thus placing the *p*-tolyl *cis*). Extension of these arguments to (IId)

TABLE 3

Lanthanoid-induced chemical shifts of 0·5M tricarbonyltroponeiron in C_6D_6

	^{1}H Shifts [a] with 0·11M Eu(dpm)$_3$			^{1}H Shifts with Eu(fod)$_3$ relative [c] exp.
Proton	Exp.	Calc.[b]	Relative [c] exp.	
H^2	440	436	4·63	4·76
H^3	139	142	1·46	1·51
H^4	99	95	1·00	1·00
H^5	112	111	1·18	1·09
H^6	120	129	1·26	1·17
H^7	419	420	4·40	4·49

^{13}C Shifts

Carbon	Free substrate chemical shift [d]	0·02M Eu(dpm)$_3$ Actual [a]	0·02M Eu(dpm)$_3$ Relative [c]	0·05M Eu(dpm)$_3$ Actual [a]	0·05M Eu(dpm)$_3$ Relative [c]	0·11M Eu(dpm)$_3$ Actual [a]	0·11M Eu(dpm)$_3$ Relative [c]	0·11M La(dpm)$_3$	Corrected 0·11M Eu(dpm)$_3$ exp.	Calc.[b]
C^1	197·4	60	10·0	128	10·0	275	10·0	50	225	241
C^2	62·1	17	2·8	37	2·9	85	3·1	−5	90	116
C^3	91·1	12	2·0	30	2·3	67	2·4	10	57	55
C^4	95·4	10	1·7	23	1·8	50	1·8	5	45	39
C^5	51·8	5	0·8	15	1·2	33	1·2	0	33	43
C^6	146·6	17	2·8	42	3·3	97	3·5	22	75	57
C^7	122·4	22	3·7	50	3·9	110	4·0	5	105	126
$Fe(CO)_3$	207·8									

[a] In Hz. [b] From best magnetic axis location (see text), $R = 0·017$. [c] To H^4 as 1·0. [d] Peak positions measured relative to solvent deuterium lock and converted to p.p.m. downfield from the tetramethylsilane signal in the same solvent. [e] To C^1 shift taken as 10·0.

TABLE 4

Eu(dpm)$_3$-induced shifts [a] in derivatives of (II)

	H^1	H^2	H^3	H^4	H^5	H^6	H^7	R	R′	τ (H^6H^5) Hz
(Ha)	6·7	2·95	1·85	1·6	6·75	7·35	10	1·05	1·3	54
(Hb) *trans* [b]	7·0	3·0	1·85	1·7	7·2	7·6	10	1·2	0·85	118
(Hc)	6·95	3·0	1·95	1·65	7·2	7·45	10	0·9	1·0	115
(Hd) *trans* [b]				1·85	7·4	7·8	10	1·3	0 (Me)	140
cis [b]				1·8	7·6	7·6	10	1·4	0·4 (Me)	40
(He) *cis* [b]	7·05	3·0	1·9	1·7	7·3	7·65	10	1·0	0·3 (Me)	118

[a] Relative to H^7 shift taken as 10. [b] *cis* and *trans* are defined with respect to the $Fe(CO)_3$ group and the largest substituent.

(where both isomers are present, ratio 1·1 to 1) leads to further complications. Although reference to the (IIa) and (IIe) data and previous assignments might suggest the stereochemistry given in Table 4 for the (IId) isomers, the agreement is not impressive; furthermore, a zero shift must be allowed as characteristic of a *trans* *p*-tolyl group [although molecular models of (IId) do support this argument by suggesting that a 'magic angle' of 54° with the principal magnetic axis can only be achieved by the *trans* isomer]. Much more disturbing is the fact that a mixture of the two isomers (IId) shows shifts in the ratio *trans* : *cis* = 0·71 rather than 1·00, showing a steric effect on the ligating power of the alcohol, and by implication on the magnetic axis position also.

Fortunately, it is possible to obtain an independent answer to this problem and in doing so to test the shift data arguments. Protons 5 and 6 in the n.m.r. spectra of (II) give rise to an AB quartet, which contains further coupling. The chemical shift difference is influenced to a large extent by the nature of the *trans* substituent. Using these data (Table 4) it is possible to obtain an excellent correlation: *trans* H, Me, and *p*-tolyl groups induce splittings of 40—54, 115—118, and 140 Hz respectively, while in the *cis* position they have little effect. The assignment of (IIb) above must therefore be reversed, and its methyl group assigned *trans* stereochemistry; the other shift reagent data assignments are confirmed.

It seems clear that the inference of stereochemistry from small shift ratio changes may be complicated and occasionally misleading, probably due to small but significant steric effects on the co-ordinates of the protons observed with respect to the average magnetic axis position. Deviation from axial symmetry could also be a factor, as has been suggested to explain the recent observation [43] that simple shift reagent arguments lead to incorrect assignments of the methyl resonances in 3,3-dimethylthietane-1-oxide.

[3/963 *Received*, 14*th May*, 1973]

[43] J. J. Uebel and R. M. Wing, *J. Amer. Chem. Soc.*, 1972, **94**, 8910.